#60218 SERIES
KEYBOARD EXTENDED HOLDER
INSTALLATION GUIDE

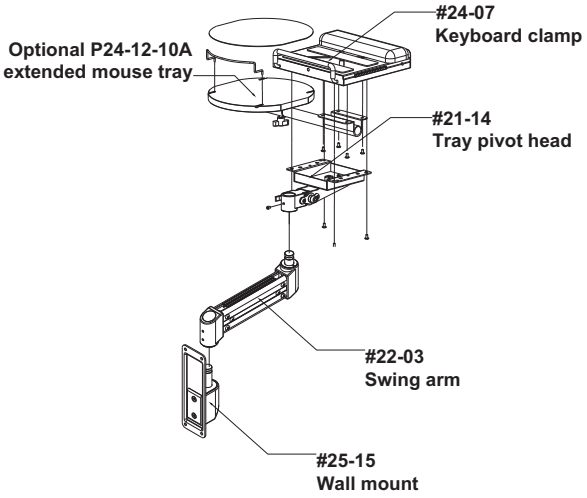

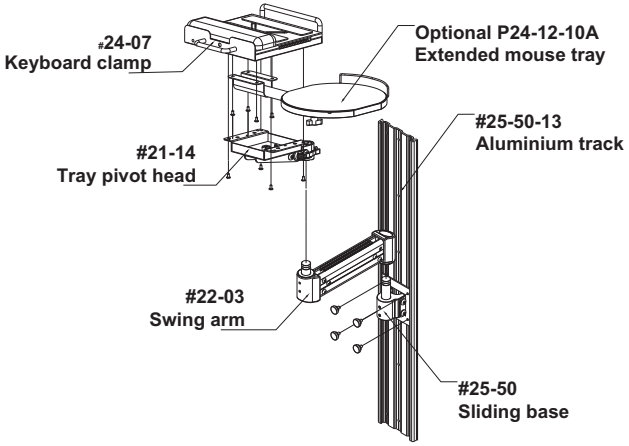

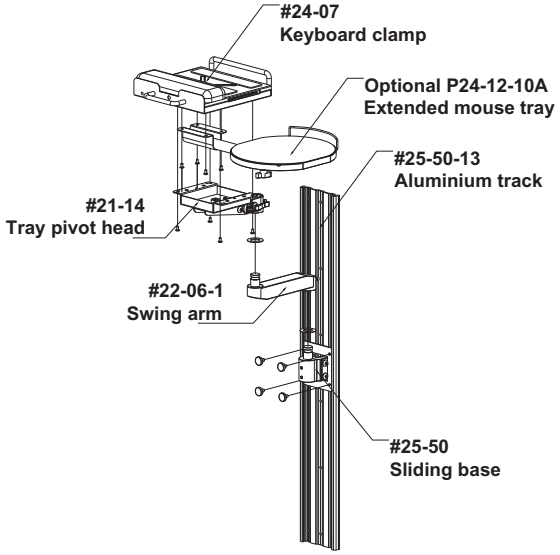

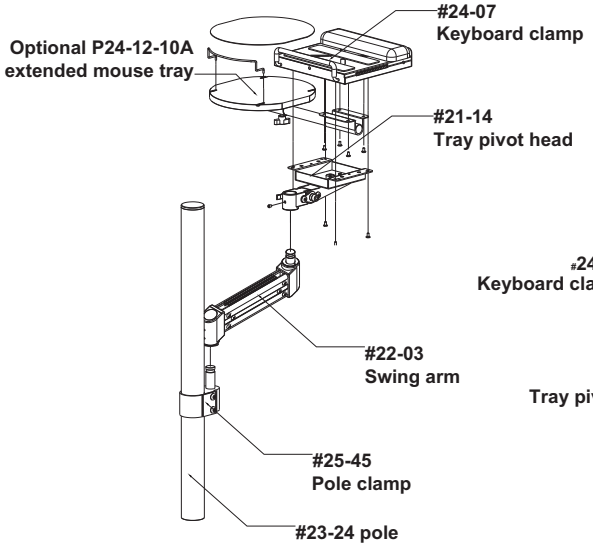

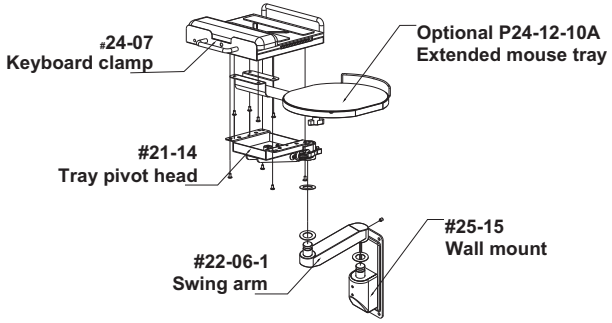

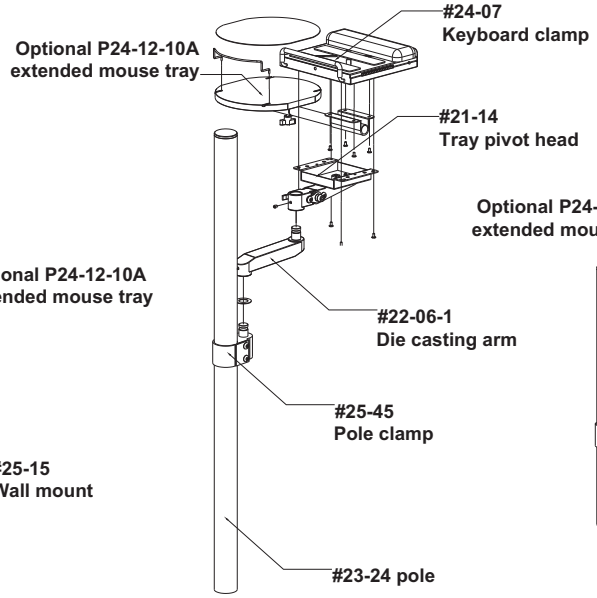

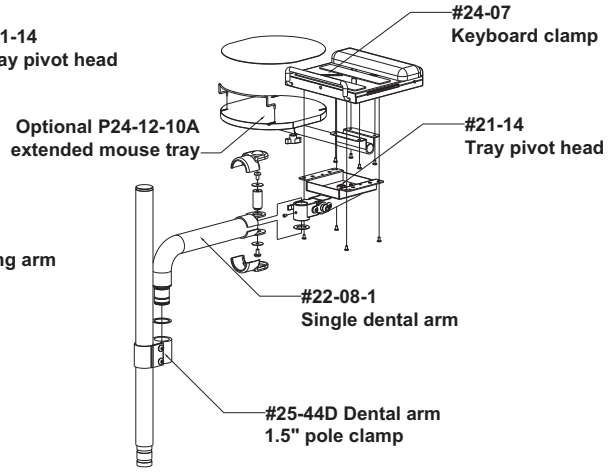

2012/01